Product Sheet

Item No.	B A H 1 5 C C 100 P 2 T 2 P 0 N

housing / data

housing type	bolt hole castor with total brake
series	apparatus
fixing type	bolt hole
hole dimensions / hub width	11 mm Diameter / 22-36 mm
thickness of fixing / fork	2.50 mm / 2.50 mm
surface treatment	zinc-chromatised

wheel / data

diameter	100 mm
wheel center	Polypropylene grey
wheel tread	thermopl. rubber 95° Shore A grey
bearing	plain bearing
threadguard	no separate threadguard
hub width	36 mm
axle diameter	M 8
temperature range	-20°C - +60°C
dyn. load capacity	100 kg
test norm	DIN EN 12530

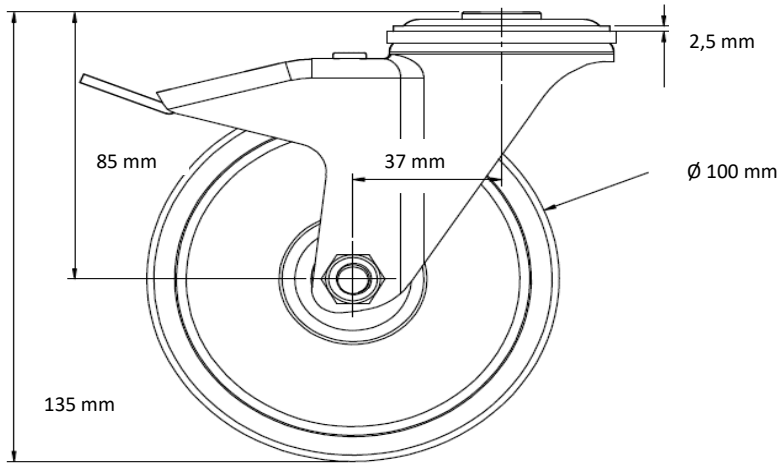

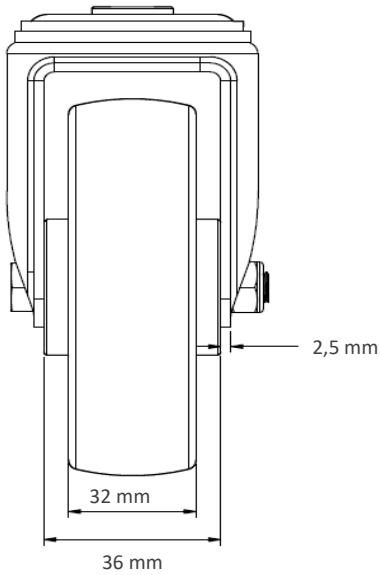

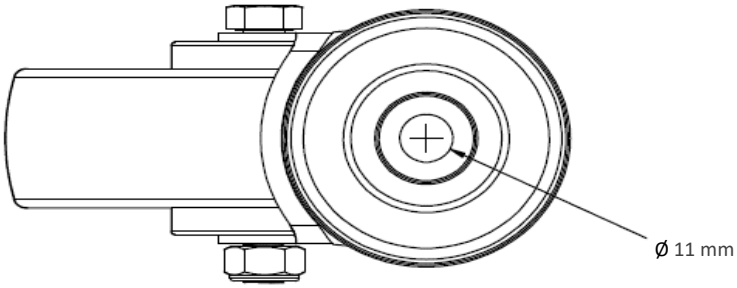

Deviation possible! All information is subject to change.

© Copyright, Cascoo Europe GmbH

CASCOO Europe GmbH – Lütke Haar 15 – 59602 Rüthen
phone: +49 (0) 29 52 -970 6290-0 – fax: +49 (0) 29 52 -970 6290-29
e-mail: info@cascoo.eu - web: www.cascoo.eu