Product Sheet

Item No. F H P 5 4 W C 125 B A X 7 D 0 N

housing / data

housing type	fixed castor
series	heavy duty
fixing type	fixing plate
hole dimensions / hub width	105 x 80 mm / 60 mm
thickness of fixing / fork	4.00 mm / 4.00 mm
surface treatment	galvanized blue zinc

wheel / data

diameter	125 mm
wheel center	Aluminium (Heavy Duty)
wheel tread	PUlastic 75° Shore A green
bearing	double ball bearing
threadguard	no separate threadguard
hub width	60 mm
axle diameter	M 12
temperature range	-20°C - +60°C
dyn. load capacity	500 kg
test norm	DIN: EN 12533

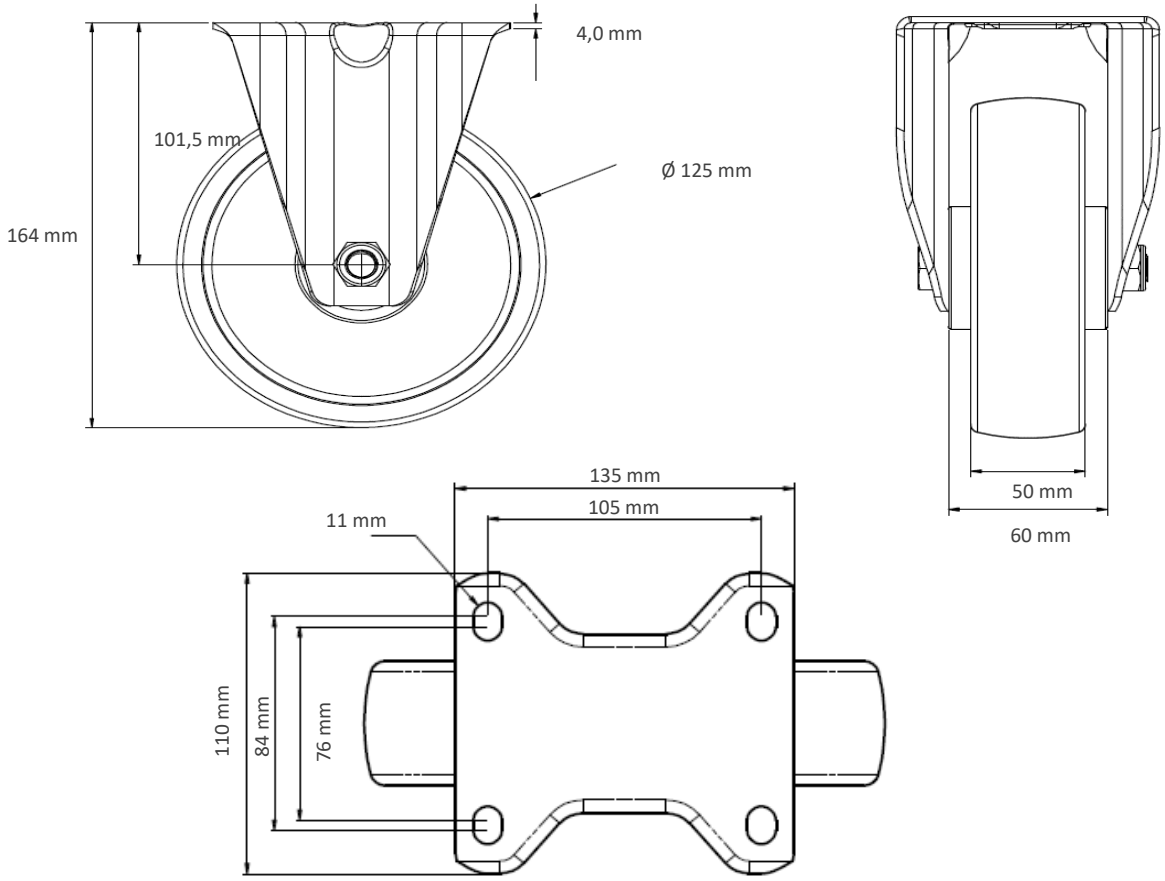

Deviation possible! All information is subject to change.

© Copyright, Cascoo Europe GmbH

CASCOO Europe GmbH – Lütke Haar 15 – 59602 Rüthen
phone: +49 (0) 29 52 -970 6290-0 – fax: +49 (0) 29 52 -970 6290-29
e-mail: info@cascoo.eu - web: www.cascoo.eu