Product Sheet

Item No. S B P 3 5 W C 125 P 4 S 4 R 0 N

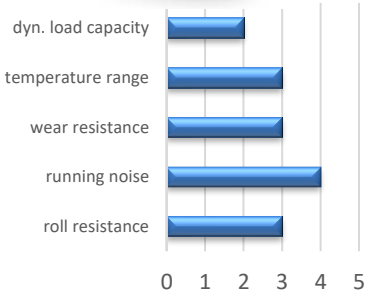

housing / data

housing type	swivel castor
series	CASCOO Basics
fixing type	fixing plate
hole dimensions / hub width	80 x 60 mm / 52 mm
thickness of fixing / fork	2.50 mm / 2.50 mm
surface treatment	galvanized blue zinc

wheel / data

diameter	125 mm
wheel center	Polypropylene black
wheel tread	solid rubber black
bearing	roller bearing
threadguard	no separate threadguard
hub width	50 mm
axle diameter	M 10
temperature range	-20°C - +60°C
dyn. load capacity	100 kg
test norm	DIN EN 12532

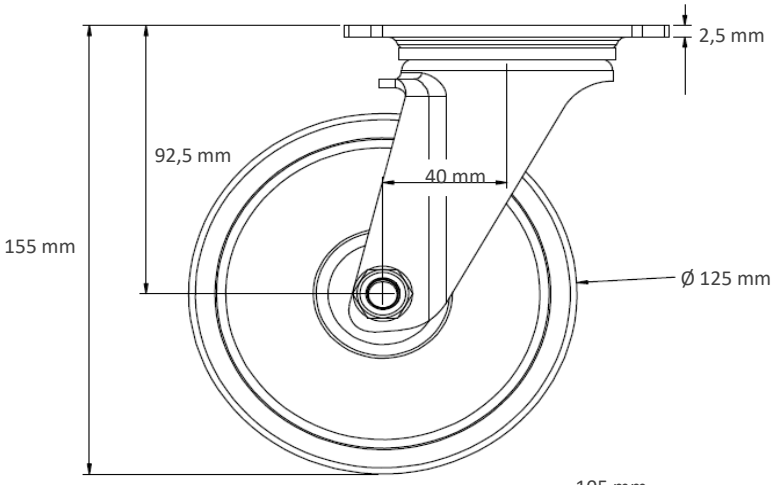

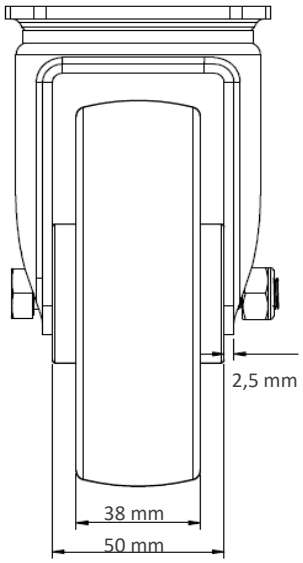

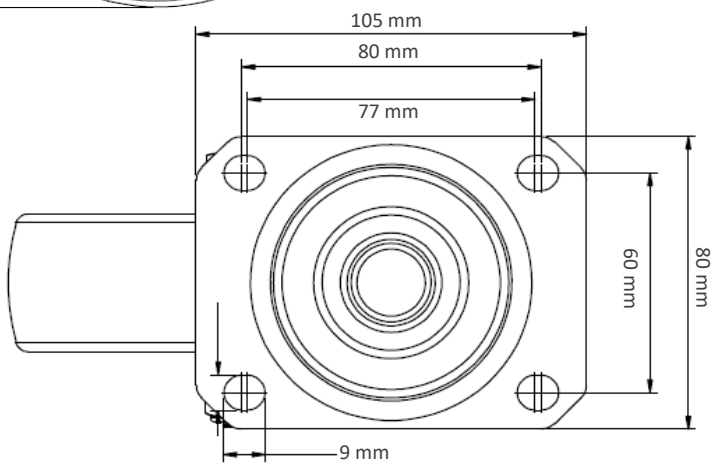

Deviation possible! All information is subject to change.

© Copyright , Cascoo Europe GmbH

CASCOO Europe GmbH – Lütke Haar 15 – 59602 Rüthen
phone: +49 (0) 29 52 -970 6290-0 – fax: +49 (0) 29 52 -970 6290-29
e-mail: info@cascoo.eu - web: www.cascoo.eu