Product Sheet

Item No.	B C H 0 S P C 125 P 2 A 2 B 4 2

housing / data

housing type	bolt hole castor with total brake
series	CASCOO Cara
fixing type	bolt hole
hole dimensions / hub width	10 mm / 12 mm diameter
thickness of fixing / fork	-
surface treatment	PA grey with fiberglass particles

wheel / data

diameter	125 mm
wheel center	Polypropylene grey
wheel tread	Thermopl. Rubber grey 85° Shore A
bearing	single ball bearing
threadguard	full covering plastic threadguard
hub width	36 mm
axle diameter	M 8
temperature range	-20°C - +60°C
dyn. load capacity	110 kg

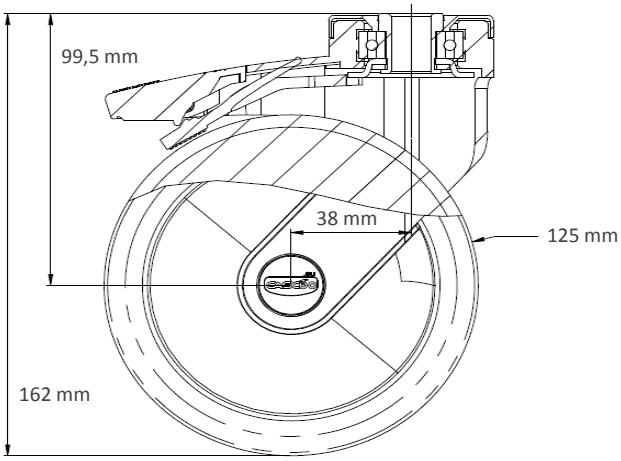

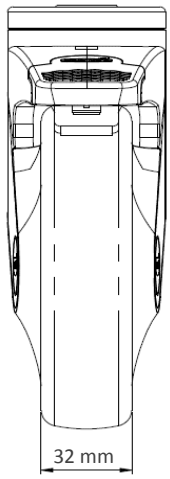

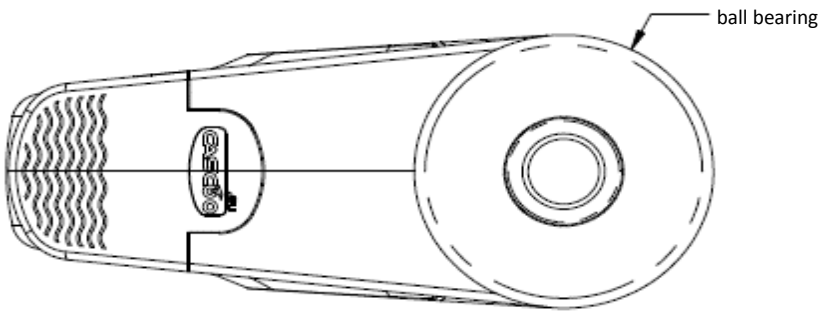

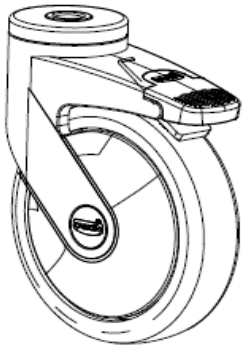

Deviation possible! All information is subject to change.

© Copyright, Cascoo Europe GmbH

CASCOO Europe GmbH – Lütke Haar 15 – 59602 Rüthen
phone: +49 (0) 29 52 -970 6290-0 – fax: +49 (0) 29 52 -970 6290-29
e-mail: info@cascoo.eu - web: www.cascoo.eu