Product Sheet

Item No. T I P 2 6 S C 100 C 4 C 4 L 0 N

housing / data

housing type	swivel castor with total brake
series	CASCOO Innovation
fixing type	fixing plate
hole dimensions / hub width	80 x 60 mm / 42 mm
thickness of fixing / fork	2.50 mm / 2.00 mm
surface treatment	stainless steel

wheel / data

diameter	100 mm
wheel center	Polyamide with fiber glass black
wheel tread	Polyamide with fiber glass black
bearing	plain bearing stainless steel
threadguard	no separate threadguard
hub width	40 mm
axle diameter	M 8
temperature range	-20°C - +280°C
dyn. load capacity	100 kg
test norm	DIN: EN 12532

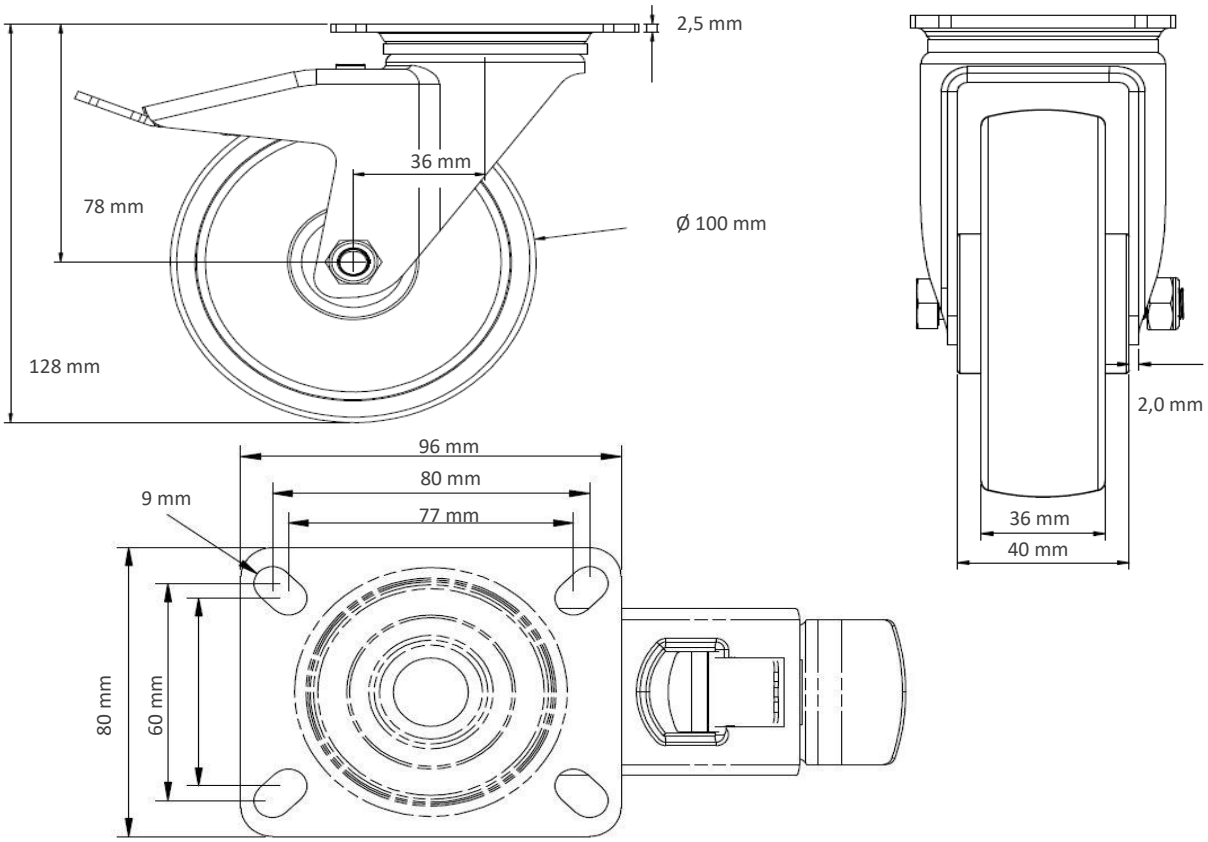

Deviation possible! All information is subject to change.

© Copyright, Cascoo Europe GmbH

CASCOO Europe GmbH – Lütke Haar 15 – 59602 Rüthen
phone: +49 (0) 29 52 -970 6290-0 – fax: +49 (0) 29 52 -970 6290-29
e-mail: info@cascoo.eu - web: www.cascoo.eu